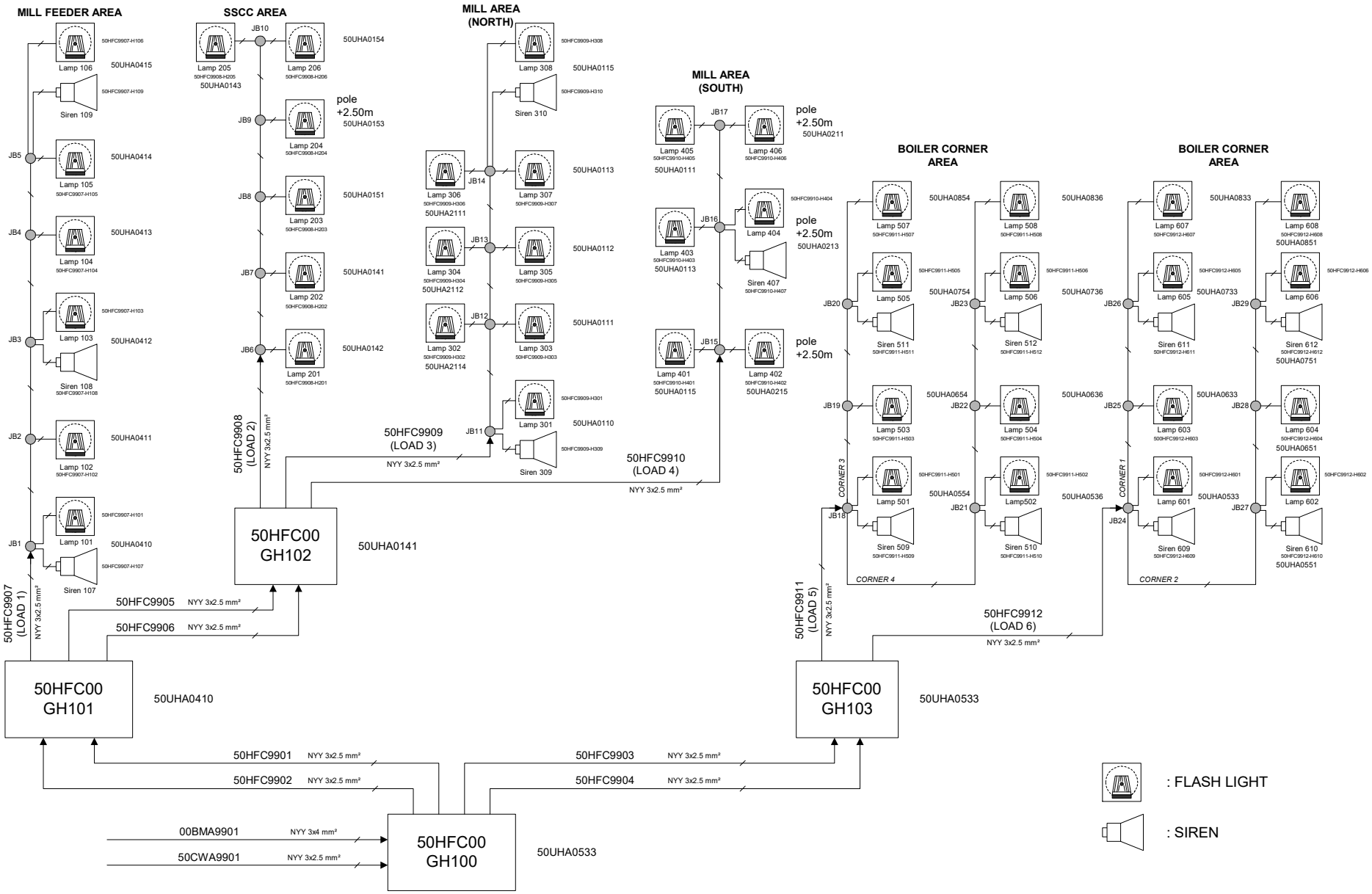

PULVERISER HAZARD WARNING SYSTEM
(DRAWING NUMBER 7)